Luminaire

Rundo 24

290-260I-10GEM3/840, B + 00-00384-1000/RUN, B

Circular luminaires with an aluminium profile come in height 24 mm. Rundo24 luminaires feature an excellent efficacy of up to 145 lm/W, which can give the space lightness and appeal. The luminaires are pendant or flush-mounted, with direct or direct-indirect distribution of light creating an interesting light halo. A circular luminaire with a PMMA opal diffuser or microprismatic optical system is suitable for both commercial spaces and households. A playful and interesting effect can be created by combining different diameters. Luminaires can be equipped with a motion sensor, daylight sensor or Bluetooth technology, which allows easy control of the luminaire from your smart device.

Type of installation	Suspended
Light distribution	Direct
Luminaire shape	Circular
Colour of the luminaires	Black
Material	Aluminium
Lifetime	L80/B20 50 000 hours
Warranty	5 years
Description of luminaires	Luminaire suspended
Dimensions	ø 630 mm × 24 mm
Light source	LED MODUL
Type of optical system	Microprisma
Luminous flux*	2130 lm
Colour Temperature	4000 K cool white
Luminous efficacy	150 lm/W
MacAdam Light source	3
Colour rendering index	80
UGR max. X=4H Y=8H, ϱ=70,50,20	16.9

Technical drawing

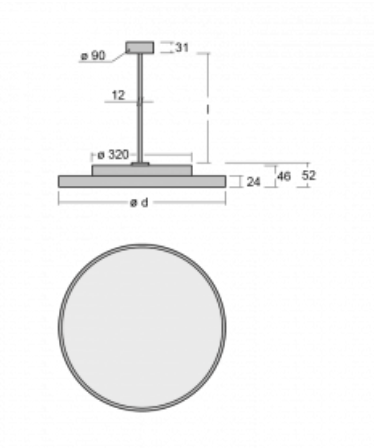

Luminaire power input*	14.2 W
Connection of the luminaires	ON/OFF + 3h emergency
Electrical voltage	220-240V
Frequency	50/60Hz

IP 40

*±10 %

Curve

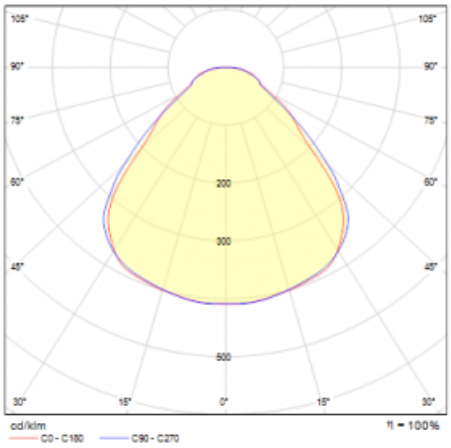

Downloads

Installation instructions

Photos